JETECH®

THE WORLD LEADER IN HIGH PRESSURE PUMPS AND PUMPING SYSTEMS

ITS SIMPLE. IT BLASTS. IT LASTS.

JETECH

High Pressure Pumps & Pumping Systems

To maximize profits and ensure consistent high quality cleaning results, the high pressure water jetting contractors and industrial water jetting users need the following:

- Equipment that is easy to operate and simple to maintain.
- Automate current manual water jetting tasks.
- Have available for purchase/lease/rental basis reliable pumping equipment suitable for up to 40,000 psi operating pressure.

JETECH'S mission is to fulfill these needed requirements, and to do so at competitive prices.

JETECH sales and operations are continually expanding and currently enjoy an excellent world-wide reputation with equipment installed in 40+ countries throughout the world. We welcome the opportunity to provide you with more information regarding any of our products and services and how they can help you save time and money.

Flow Rates up to 40 GPM (152 L/M)
Pressures up to 40,000 PSI (2,760 BAR)

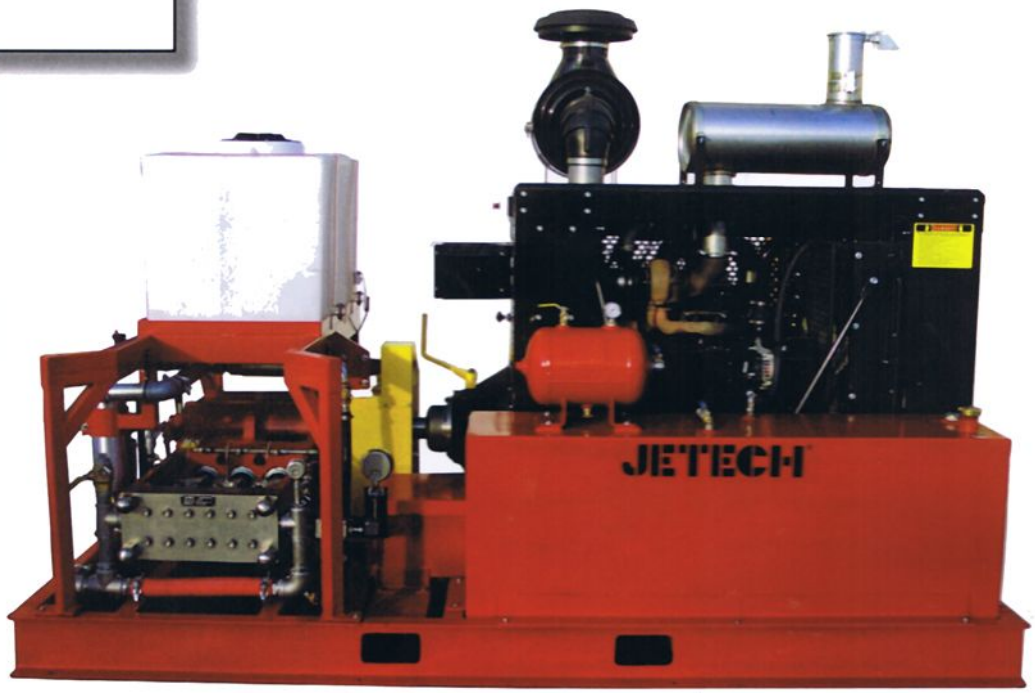

Model 250TJ3-UHDS

JETECH®

High Pressure Pumps & Pumping Systems

Flow Rates up to 29.9 GPM
(113 L/M)
Pressures up to 40,000 PSI
(2,760 BAR)

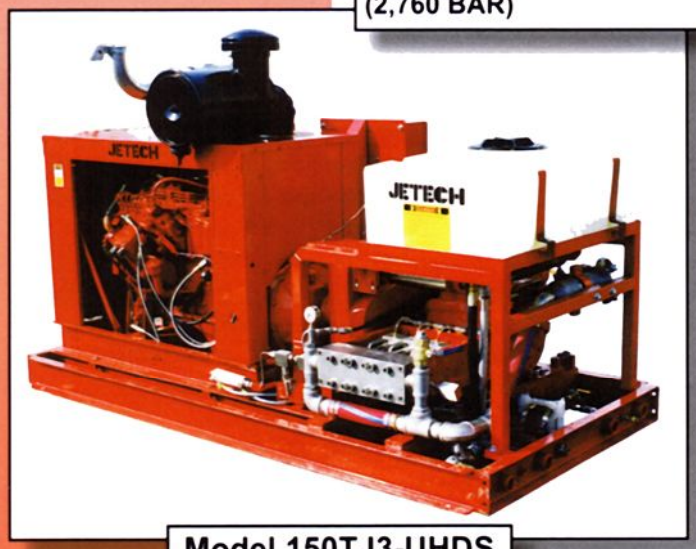

Model 150TJ3-UHDS

Flow Rates up to 318 GPM
(1,204 L/M)
Pressures up to 40,000 PSI
(2,760 BAR)

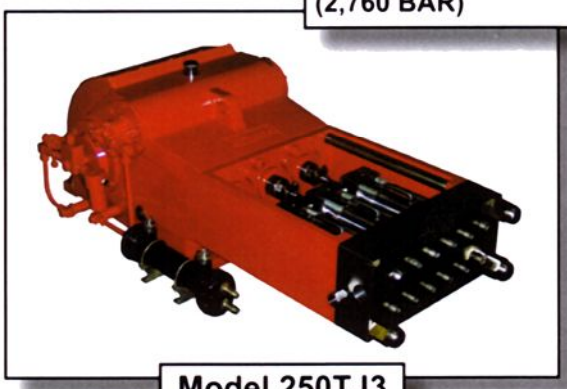

Model 250TJ3

Flow Rates up to 441 GPM
(1,681 L/M)
Pressures up to 40,000 PSI
(2,760 BAR)

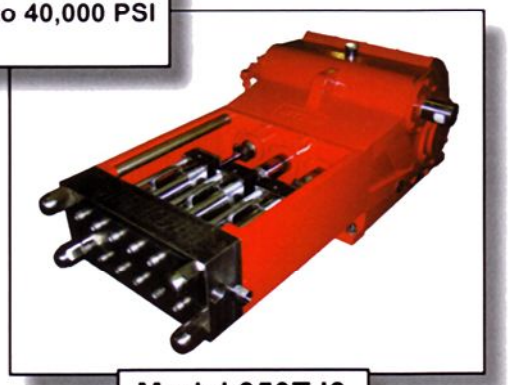

Model 350TJ3

Flow Rates up to 76.9 GPM
(291 L/M)
Pressures up to 40,000 PSI
(2,760 BAR)

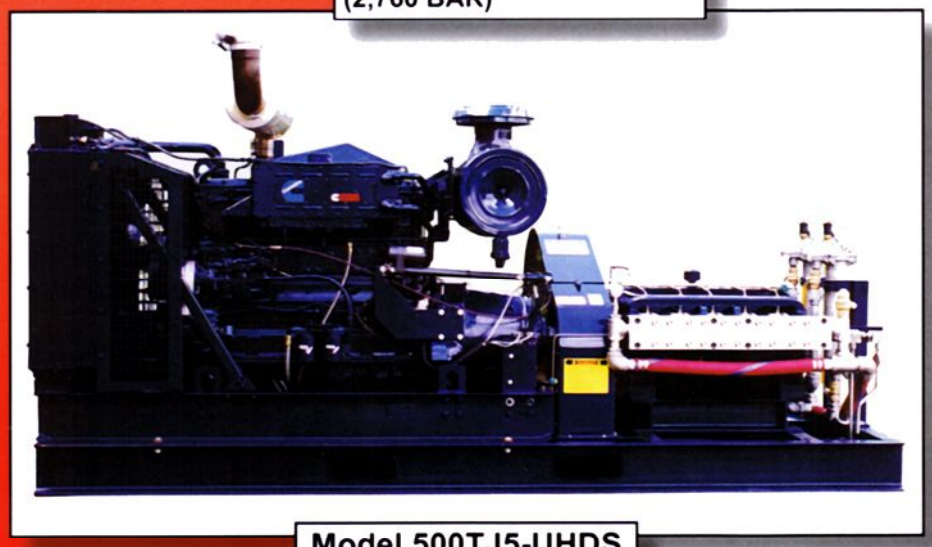

Model 500TJ5-UHDS

JETECH "AD" LIQUID-END

The JETECH® "AD" Liquid-End Conversion Package may be the solution to your operational and maintenance problems!

Don't tolerate lengthy down-time, limited operating pressure range, and expensive replacement parts and maintenance cost with your existing water-blast pump. Modernize it by replacing the original style liquid-end with the JETECH® "AD" Liquid-End Conversion Package.

The JETECH® "AD" Liquid-End Conversion Package is designed to fit most existing water-blast pump power ends regardless of the manufacturer.

The "AD" Liquid-End is the same design Jetech uses throughout its pump range. The design will permit you to operate confidently at pressures as high as 40,000 psi and at the same time benefit from its exceptional ULTRA-EASY MAINTENANCE FEATURES. An examination of the "AD" Liquid-End will convince you that no other pump offers so many positive design features.

Liquid-End Features:

All JETECH® Advanced Design Liquid-Ends are precision-machined to exacting tolerances and feature segmented cylinders of the radial compression, single-bore design. The radial compression, single-bore feature eliminates undesirable bore intersections and cylinder tensile stresses which are known to be the major factors leading to pump cylinder failure.

Single-Spring Valves:

The JETECH® unique single-spring radial compression inline valve cartridge design eliminates the traditional discharge valve spring required in other plunger pumps. Since only one spring serves both suction and discharge valves, the single-spring feature effectively reduces the possibility of valve spring breakage up to 50% over two spring units.

Plungers:

The plungers are manufactured to exacting tolerances of nominal OD (+0.000/-0.001) inches. The H-STYLE liquid-end will be fitted with Stainless Steel plungers with a hard coating surface of 60 Rc. The UH-STYLE liquid-end will be fitted with Tungsten Carbide plungers. All plungers are ground to a smooth surface finish of 8 RMS to provide long packing life.

Packing:

The pump is designed to accommodate a broad spectrum of packing arrangements. The standard arrangement is the non-adjustable, spring loaded style that can be fitted with vee, square or JETECH® flat-backed chevron rings to withstand high pulsing loads.

Stuffing Boxes:

The stuffing boxes of the "AD" Liquid-End are engineered as part of the segmented cylinders and are designed without radii. This important feature is essential to eliminate radii stress points which are the prime sources of stuffing box cracking.

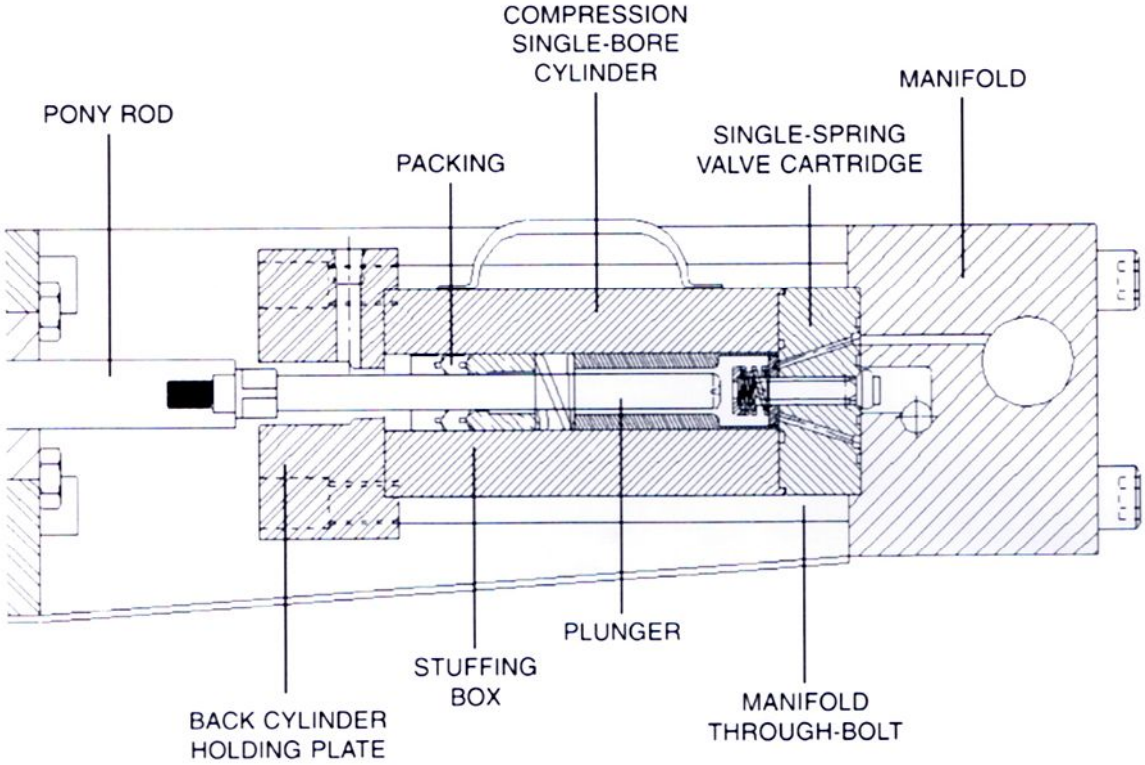

JETECH "AD" LIQUID-END

Maintenance Features:
The **"AD" Liquid-End** offers many ease of maintenance features. The segmented liquid cylinders are held to a common manifold by four through-manifold bolts that screw into a back cylinder holding plate. The removal of each cylinder is a simple task that requires only the unscrewing of the plunger from the pony rod and the removal of the four through-manifold bolts, which are accessible from the front of the manifold. Packing, plunger, valve, and cylinder changes can be accomplished in short time spans and do not require special skills of the workman. All that is required is the disconnecting of the plunger, loosening of the four through-manifold bolts and the sliding back of the cylinder approximately two inches toward the Power End. The valve cartridge can then be easily lifted from between the manifold and cylinder. This feature is great for quick suction and discharge valve inspection, or component changing. When it comes to ease of field maintenance, no other through-bore type pump comes close to the exceptional versatility of the **JETECH® "AD" Liquid-End**.

Maintenance Feature Summation:

- Easy maintenance with minimum down-time.
- Fewer moving parts than conventional plunger pumps.
- No special tools required.
- Common suction/discharge manifold does not have to be removed - no heavy parts to lift.
- All bolts are accessible from the front of the pump.
- "Lift out" valve cartridge - allows easy inspection and maintenance.
- Does not require disconnecting hoses or plumbing to the manifold

All bolts are accessible from the front

Lifting out the Valve Cartridge

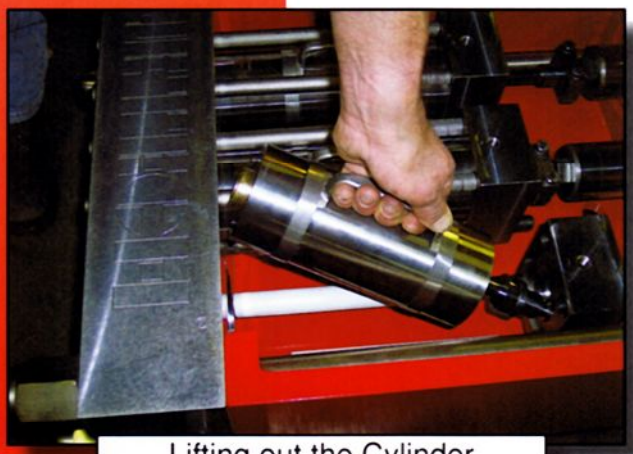
Lifting out the Cylinder

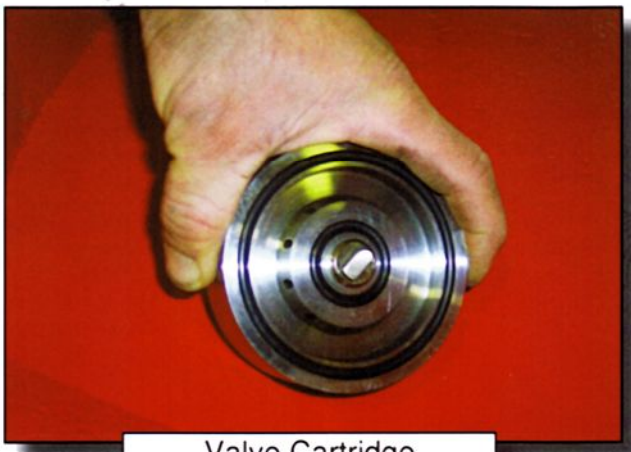
Valve Cartridge

JETECH

JETECH "RO" LIQUID-END

For the Toughest Reverse Osmosis Needs

Many of the worlds drinking water needs are solved with reverse osmosis desalinization. This process requires a reliable, efficient pump to feed the membranes with sea water. Jetech's RO pumps and Liquid ends are designed for the toughest Reverse Osmosis applications. Standard construction is low carbon and PH stainless steels. The RO liquid end is also available in Duplex and Super Duplex materials for ultimate corrosion resistance and performance in desalinization installations.

- Positive displacement: 85-95% efficient, exceeding other pump Types
- Ceramic plungers
- No special tools required
- Reversible and interchangeable valve components
- Precision machined to exacting tolerances
- High grade materials

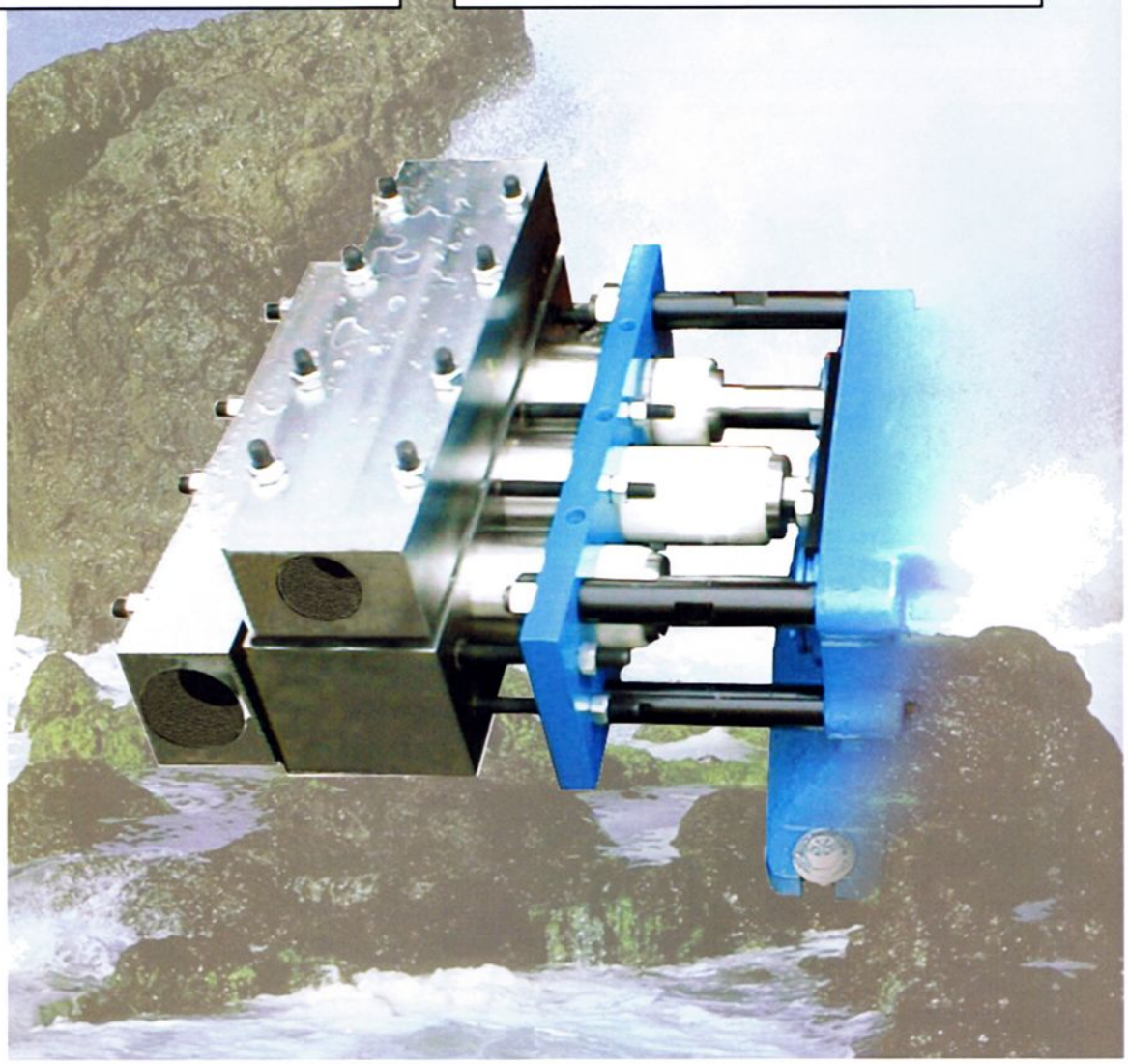

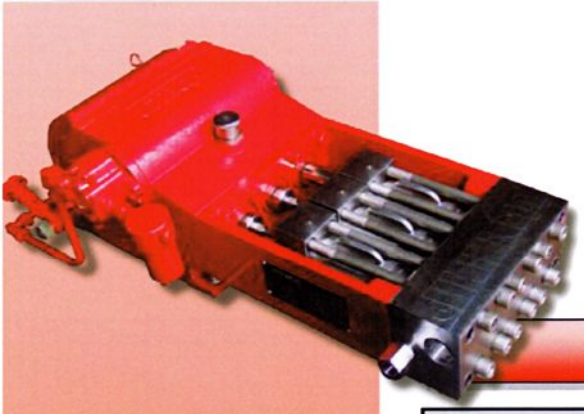

JETECH®

50TJ3

Pump Performance and Engineering Data

			JETECH "AD" Liquid End Design								RO Design
			UH			H					RO
PRESSURE		PSI	40,000	30,000	20,000	20,000	15,000	10,000	7,000	5,000	1,200
		BAR	2,760	2,070	1,380	1,380	1,030	690	480	340	80
FLOW	60 Hz. 1800 RPM INPUT 490 RPM OUTPUT	GPM	2.1	2.8	3.7	3.7	5.8	8.3	11.3	14.8	59
		L/M	7.9	10.7	14	14	21.8	31.4	42.8	55.9	224
	50 Hz. 1500 INPUT 405 RPM OUTPUT	GPM	1.7	2.3	3	3	4.8	6.9	9.3	12.2	48.8
		L/M	6.5	8.8	11.5	11.5	18	26	35.4	46.2	185
PLUNGER		INCH	3/8	7/16	1/2	1/2	5/8	3/4	7/8	1	2
		MM	9.5	11.1	12.7	12.7	15.9	19.1	22.2	25.4	50.8

Performance based on 100% volumetric efficiency

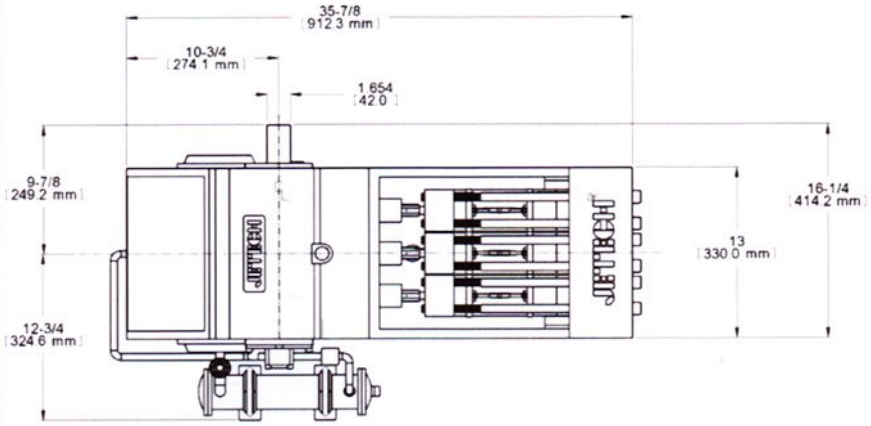

Maximum Input Power	59 HP	44 KW
Stroke Length	2.95 INCH	75 mm
Weight	500Lbs	227 Kg
Power-End Type	Triplex Crankshaft	
Gear Type	Double Helical	
Gear Ratio	3.68:1	
Connecting Rod Bearings	Shell Type	
Main Bearings	Roller	
Pinion Bearing	Roller	
Crank Shaft	Alloy Steel	
Power-End Lubrication	Pressurized	
Power-End Oil Capacity	3.5 qt.	3.3 L
Oil Type	SAE 80W-90	

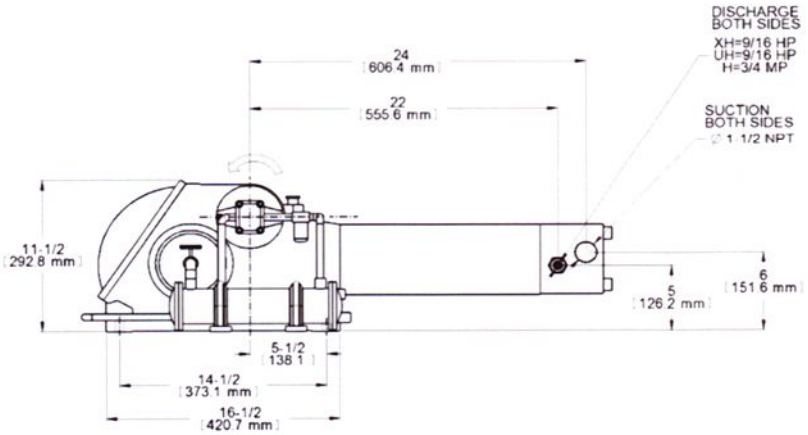

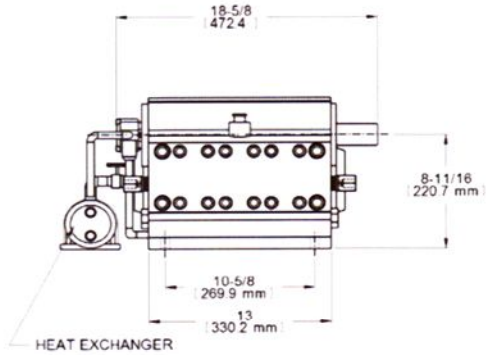

10/4/11

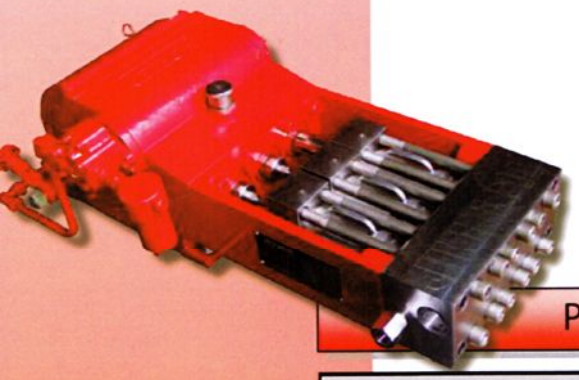

JETECH®

100TJ3

Pump Performance and Engineering Data

			JETECH "AD" Liquid End Design												RO Design
			XH	UH						H					RO
PRESSURE		PSI	50,000	40,000	30,000	25,000	20,000	15,000	13,000	20,000	15,000	13,000	10,000	7,000	1,200
		BAR	3,450	2,760	2,070	1,720	1,380	1,030	900	1,380	1,030	900	690	480	80
FLOW	60 Hz. 1800 INPUT 490 OUTPUT	GPM	2.8	3.7	4.7	5.8	7.0	9.7	11.3	7	9.7	11.3	14.8	20.8	70.3
		L/M	10.7	14	17.7	21.8	26.4	36.9	42.8	26.4	36.9	42.8	55.9	78.8	266
	50 Hz. 1500 INPUT 405 OUTPUT	GPM	2.3	3	3.9	4.8	5.8	8.1	9.3	5.8	8.1	9.3	12.2	17.2	58.5
		L/M	8.8	11.5	14.6	18.0	21.8	30.5	35.4	21.8	30.5	35.4	46.2	65.1	221
PLUNGER		INCH	7/16	1/2	9/16	5/8	11/16	13/16	7/8	11/16	13/16	7/8	1	1 3/16	2 1/8
		MM	11.1	12.7	14.3	15.9	17.5	20.6	22.2	17.5	20.6	22.2	25.4	30.2	54.0

Performance based on 100% volumetric efficiency

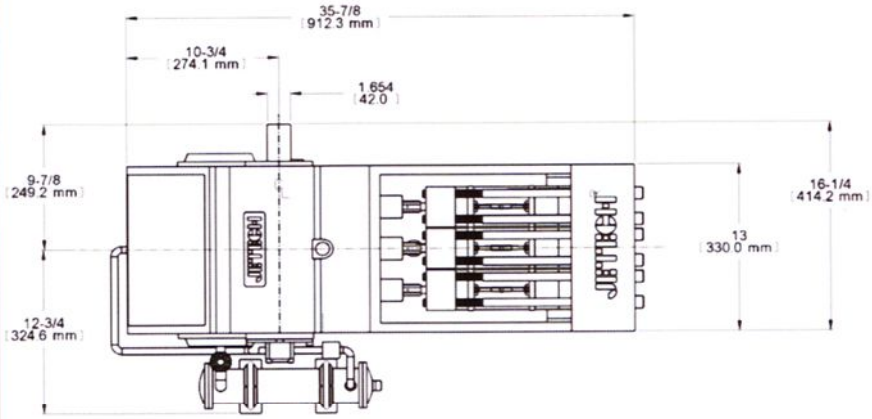

Maximum Input Power	108 HP	80 KW
Stroke Length	2.95 INCH	75 mm
Weight	600 Lbs	270 Kg
Power-End Type	Triplex Crankshaft	
Gear Type	Double Helical	
Gear Ratio	3.68:1	
Connecting Rod Bearings	Shell Type	
Main Bearings	Roller	
Pinion Bearing	Roller	
Crank Shaft	Alloy Steel	
Power-End Lubrication	Pressurized	
Power-End Oil Capacity	3.5 qt.	3.3 L
Oil Type	SAE 80W-90	

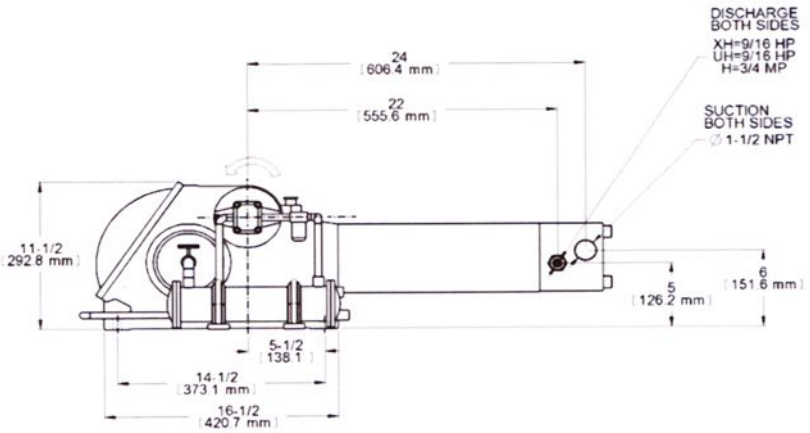

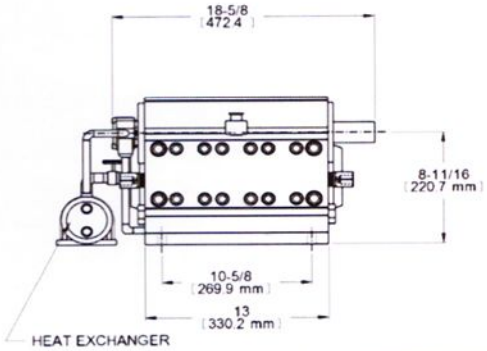

10/4/11

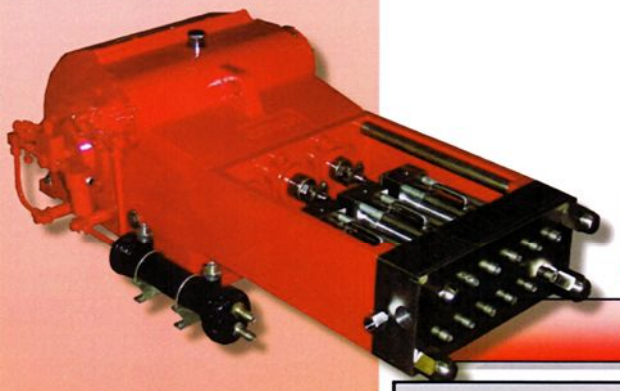

JETECH®

150TJ3

Pump Performance and Engineering Data

			JETECH "AD" Liquid End Design									RO Design
			XH	UH				H				RO
PRESSURE		PSI	50,000	40,000	30,000	20,000	15,000	20,000	15,000	10,000	6,000	1,200
		BAR	3,450	2,760	2,070	1,380	1,030	1,380	1,030	690	410	80
FLOW	60 Hz. 1800 RPM INPUT 440 RPM OUTPUT	GPM	5.3	6.7	8.3	11.9	16.2	11.9	16.2	23.9	40.1	224
		L/M	20	25.4	31.3	45.1	61.4	45.1	61.4	90.6	152	848
	50 Hz. 1500 INPUT 366 RPM OUTPUT	GPM	4.4	5.6	6.9	9.9	13.5	9.9	13.5	19.9	33.3	186
		L/M	16.7	21.1	26.1	37.5	51.1	37.5	51.1	75.4	126	705
PLUNGER		INCH	1/2	9/16	5/8	3/4	7/8	3/4	7/8	1 1/16	1 3/8	3 1/4
		MM	12.7	14.3	15.9	19.1	22.2	19.1	22.2	27.0	34.9	82.6

Performance based on 100% volumetric efficiency

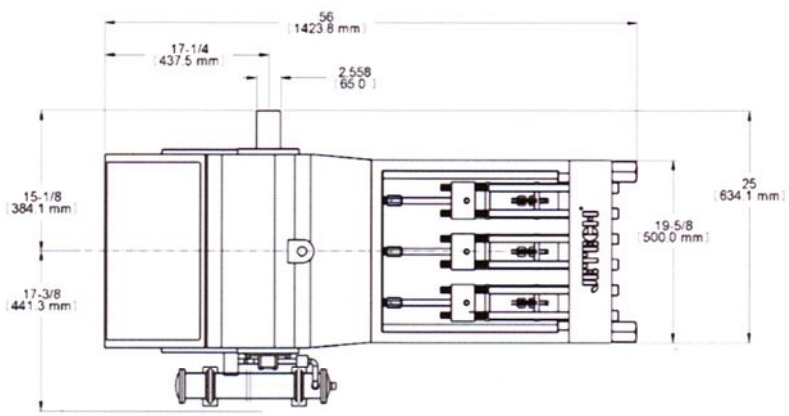

Maximum Input Power	175 HP	130 KW
Stroke Length	4.72 INCH	120 mm
Weight	1500Lbs	680 Kg
Power-End Type	Triplex Crankshaft	
Gear Type	Double Helical	
Gear Ratio	4.1:1	
Connecting Rod Bearings	Shell Type	
Main Bearings	Roller	
Pinion Bearing	Roller	
Crank Shaft	Alloy Steel	
Power-End Lubrication	Pressurized	
Power-End Oil Capacity	14 qt.	13 L
Oil Type	SAE 80W-90	

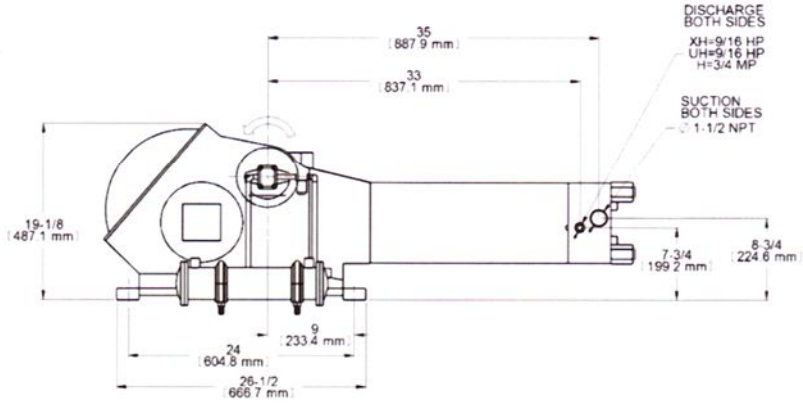

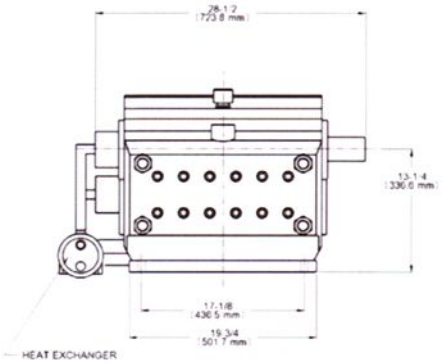

10/4/11

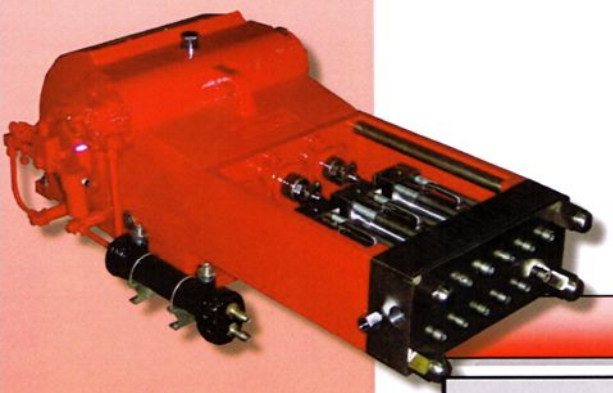

JETECH®

250TJ3

Pump Performance and Engineering Data

			JETECH "AD" Liquid End Design							RO Design
			XH	UH			H			RO
PRESSURE		PSI	50,000	40,000	30,000	20,000	20,000	15,000	10,000	1,200
		BAR	3,450	2,760	2,070	1,380	1,380	1,030	690	80
FLOW	60 Hz. 1800 RPM INPUT 440 RPM OUTPUT	GPM	8.0	10.0	11.9	18.6	18.6	26.8	40.0	318
		L/M	30.1	37.9	45.1	70.5	70.5	102	152	1204
	50 Hz. 1500 INPUT 366 RPM OUTPUT	GPM	6.6	8.3	9.9	15.5	15.5	22.3	33.3	265
		L/M	25.1	31.5	37.5	58.6	58.6	84.4	126	1002
PLUNGER		INCH	5/8	11/16	3/4	15/16	15/16	1 1/8	1 3/8	3 7/8
		MM	15.9	17.5	19.1	23.8	23.8	28.6	34.9	98.4

Performance based on 100% volumetric efficiency

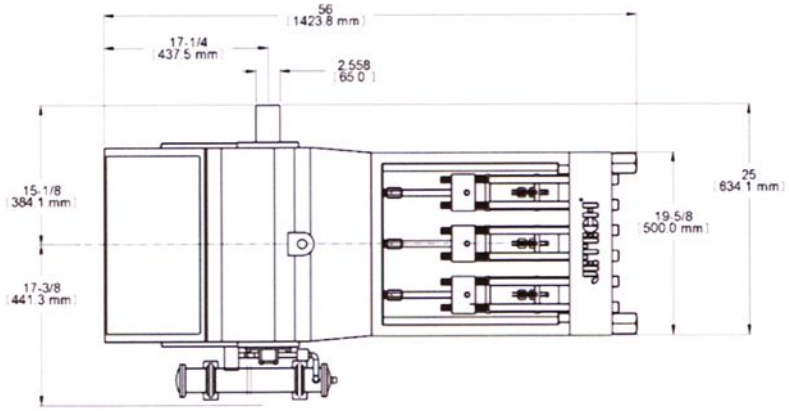

Maximum Input Power	261 HP	194 KW
Stroke Length	4.72 INCH	120 mm
Weight	1500Lbs	680 Kg
Power-End Type	Triplex Crankshaft	
Gear Type	Double Helical	
Gear Ratio	STD.=4.1:1, XH=4.62:1	
Connecting Rod Bearings	Shell Type	
Main Bearings	Roller	
Pinion Bearing	Roller	
Crank Shaft	Alloy Steel	
Power-End Lubrication	Pressurized	
Power-End Oil Capacity	14 qt.	13 L
Oil Type	SAE 80W-90	

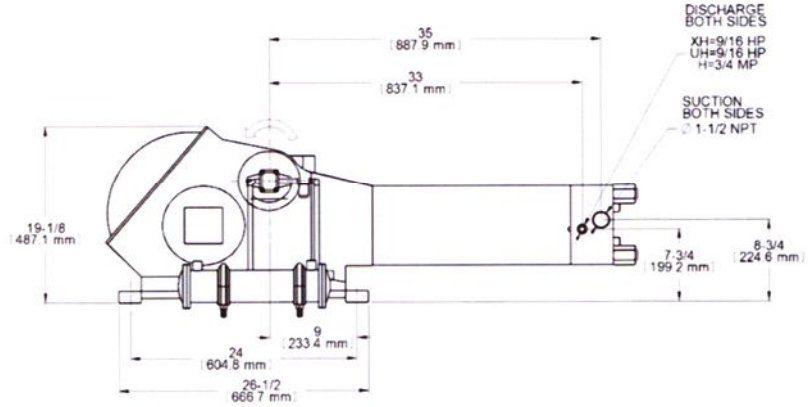

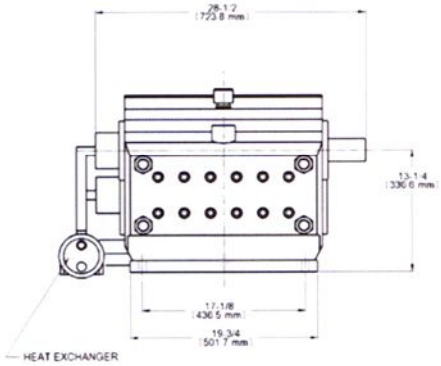

10/4/11

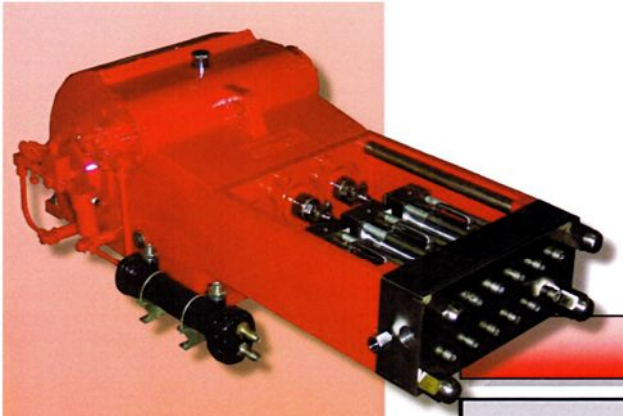

JETECH®

350TJ3

Pump Performance and Engineering Data

			JETECH "AD" Liquid End Design							RO Design
			XH	UH			H			RO
PRESSURE		PSI	50,000	40,000	30,000	20,000	20,000	15,000	10,000	1,200
		BAR	3,450	2,760	2,070	1,380	1,380	1,030	690	80
FLOW	60 Hz. 1800 RPM INPUT 500 RPM OUTPUT	GPM	10.2	12.3	17.2	26.1	26.1	36.8	53.9	441
		L/M	38.6	46.7	65.2	98.8	98.8	139	204	1681
	50 Hz. 1500 INPUT 428 RPM OUTPUT	GPM	8.7	10.6	14.7	22.3	22.3	31.5	46.2	380
		L/M	32.8	40.0	55.8	84.6	84.6	119	175	1439
PLUNGER		INCH	5/8	11/16	13/16	1	1	1 3/16	1 7/16	4 1/8
		MM	15.9	17.5	20.6	25.4	25.4	30.2	36.5	105

Performance based on 100% volumetric efficiency

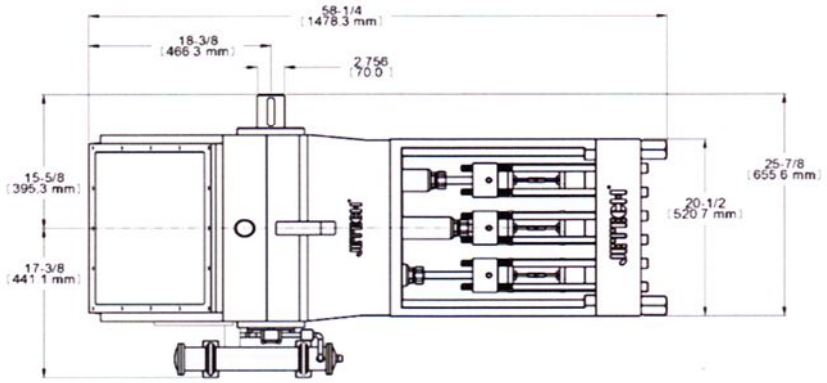

Maximum Input Power	358 HP	267 KW
Stroke Length	5.12 INCH	130 mm
Weight	1800Lbs	816 Kg
Power-End Type	Triplex Crankshaft	
Gear Type	Double Helical	
Gear Ratio	3.5:1 or 4.619:1	
Connecting Rod Bearings	Shell Type	
Main Bearings	Roller	
Pinion Bearing	Roller	
Crank Shaft	Alloy Steel	
Power-End Lubrication	Pressurized	
Power-End Oil Capacity	14 qt.	13 L
Oil Type	SAE 80W-90	

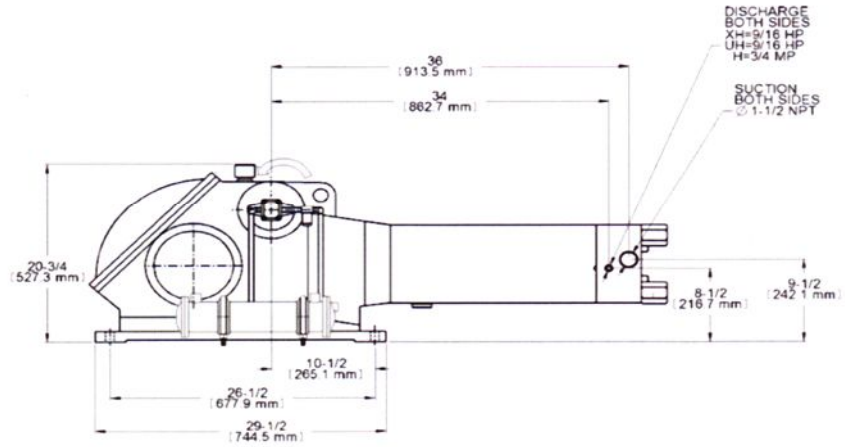

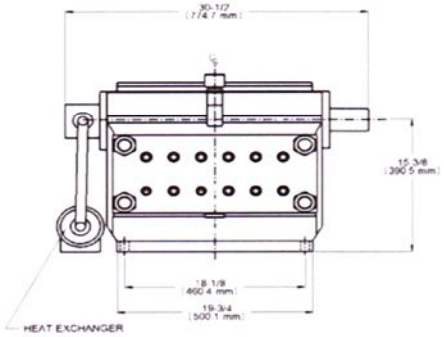

10/4/11

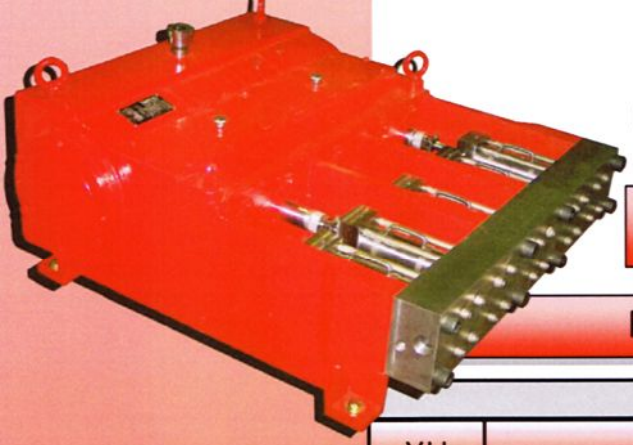

JETECH®

500TJ5

Pump Performance and Engineering Data

			JETECH "AD" Liquid End Design									RO Design
			XH	UH					H			RO
PRESSURE		PSI	50,000	40,000	36,000	30,000	25,000	20,000	20,000	15,000	10,000	1,200
		BAR	3,450	2,760	2,480	2,070	1,720	1,380	1,380	1,030	690	80
FLOW	375 RPM 400 (XH)	GPM	15.1	19.2	22.1	25.1	31.8	39.2	39.2	51.9	76.9	628
		L/M	57	72.7	83.5	95.0	120	148	148	196	291	2375
PLUNGER		INCH	3/4	7/8	15/16	1	1 1/8	1 1/4	1 1/4	1 7/16	1 3/4	5
		MM	19.1	22.2	23.8	25.4	28.6	31.8	31.8	36.5	44.5	127.0

Performance based on 100% volumetric efficiency

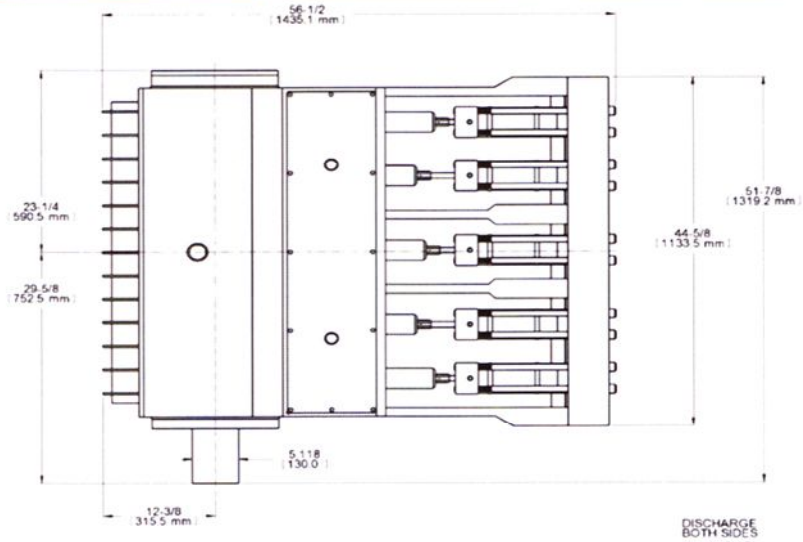

Maximum Input Power	516 HP	385 KW
Stroke Length	3.94 INCH	100 mm
Weight	4800Lbs	2180 Kg
Power-End Type	Quintuplex Crankshaft	
Gear Type	NA	
Gear Ratio	NA	
Connecting Rod Bearings	Shell Type	
Main Bearings	Roller	
Pinion Bearing	NA	
Crank Shaft	Alloy Steel	
Power-End Lubrication	Splash	
Power-End Oil Capacity	28 qt.	26.5 L
Oil Type	SAE 30	

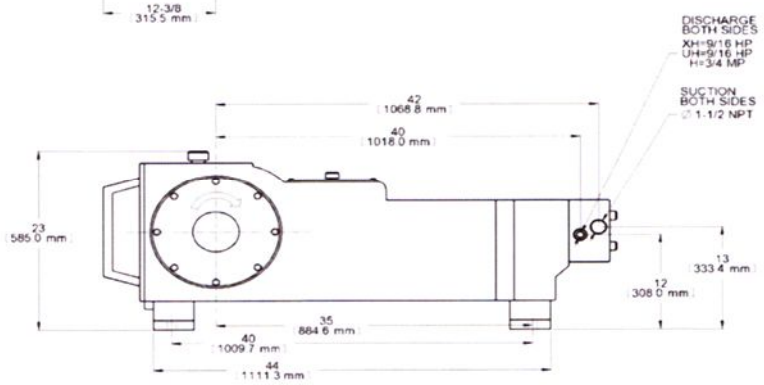

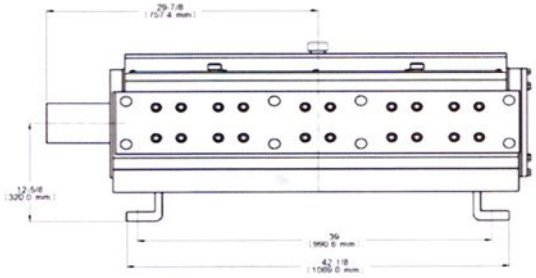

10/5/11

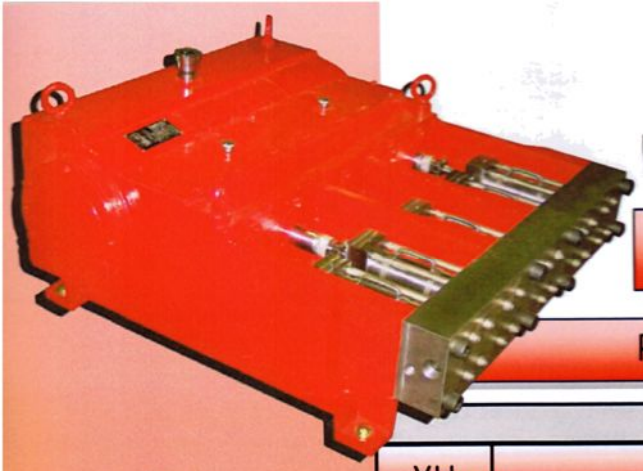

JETECH®

600TJ5

Pump Performance and Engineering Data

			JETECH "AD" Liquid End Design									RO Design
			XH	UH					H			RO
PRESSURE		PSI	50,000	40,000	36,000	30,000	25,000	20,000	20,000	15,000	10,000	1,200
		BAR	3,450	2,760	2,480	2,070	1,720	1,380	1,380	1,030	690	80
FLOW	425 RPM 475 (XH)	GPM	17.9	21.8	25.0	28.4	36.0	44.4	44.4	58.8	87.1	711
		L/M	67.7	82.4	95.6	108	136	168	168	223	330	2692
PLUNGER		INCH	3/4	7/8	15/16	1	1 1/8	1 1/4	1 1/4	1 7/16	1 3/4	5
		MM	19.1	22.2	23.8	25.4	28.6	31.8	31.8	36.5	44.5	127.0

Performance based on 100% volumetric efficiency

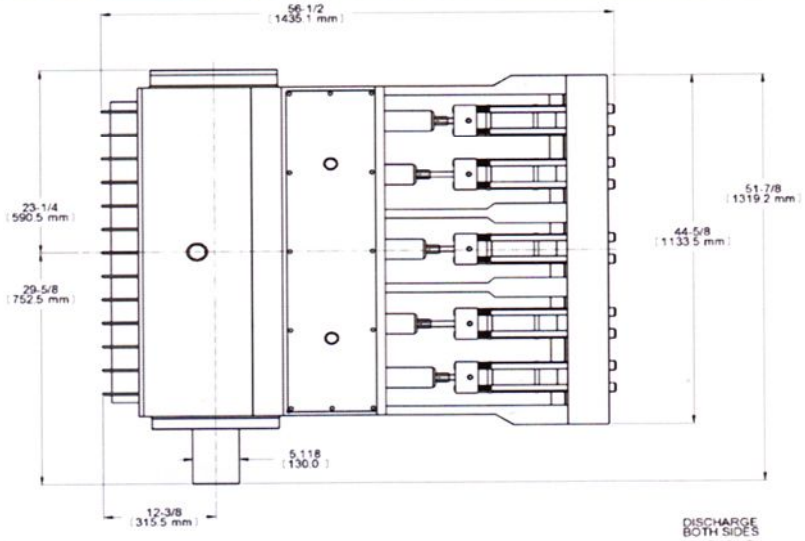

Maximum Input Power	618 HP	461 KW
Stroke Length	3.94 INCH	100 mm
Weight	4800Lbs	2180 Kg
Power-End Type	Quintuplex Crankshaft	
Gear Type	NA	
Gear Ratio	NA	
Connecting Rod Bearings	Shell Type	
Main Bearings	Roller	
Pinion Bearing	NA	
Crank Shaft	Alloy Steel	
Power-End Lubrication	Splash	
Power-End Oil Capacity	28 qt.	26.5 L
Oil Type	SAE 30	

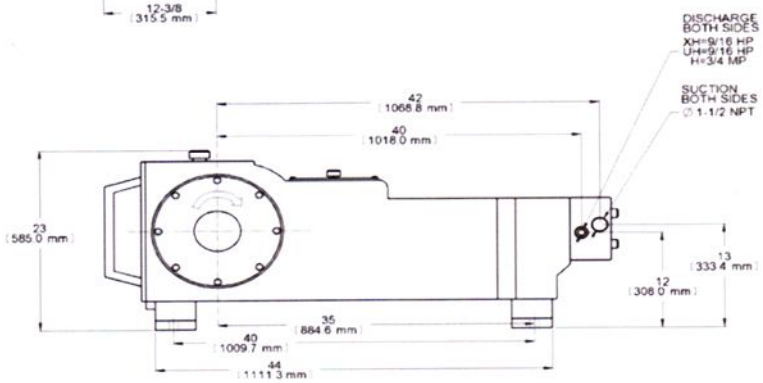

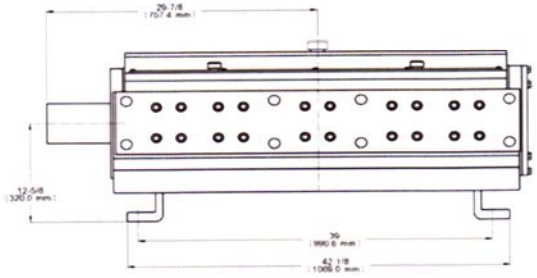

10/4/11

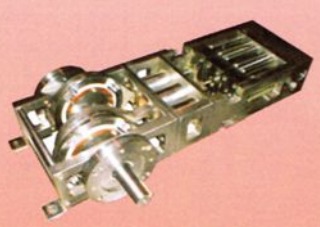

JETECH®

Sub-Sea Pumps

Jetech's specialty line of sub-sea pumps can be manufactured in sizes up to 700 horsepower. The performance data shown on the next page illustrates the 100 horsepower unit. The pumps have a proven track record of dives and are designed to operate in depths of 10,000 feet.

JETECH HIGH PRESSURE TRIPLEX and QUINTUPLEX PUMP

MODEL 100J3-UW & 100J5-UW

Without a doubt, **JETECH® Model UW-UH Sub-sea** line of triplex and quintuplex pumps represents a new era in under water pumping equipment. Engineered to function in sub-sea environments, the pumps are capable of operating up to 40,000-psi (2750 bar) discharge pressure.

The unique design of the UW-UH pumps permit the crankcase of the pumps to be flooded by seawater and thus, have zero differential pressure between the internal and external casing of the power-end. This will allow the UW-UH pumps to operate in the deepest depths of the ocean.

The UW-UH Pumps "DO NOT REQUIRE OIL OR GREASE" in the power-end. They are engineered to operate using seawater for cooling and lubricating the bearings and other moving components.

The UW-UH pumps are well suited to be driven by a direct connected hydraulic motor.

When mounted onto an ROV, thousands of dollars of expensive ultra-high pressure hose is eliminated. Depending on the operating depth, savings can exceed $100,000 dollars. In addition only about 20 feet of hose is required and thus, excessive pressure drop associated with long lengths of hose is eliminated. This permits all pressure generated by the pump to do productive work which means increased efficiency in the water jetting process.

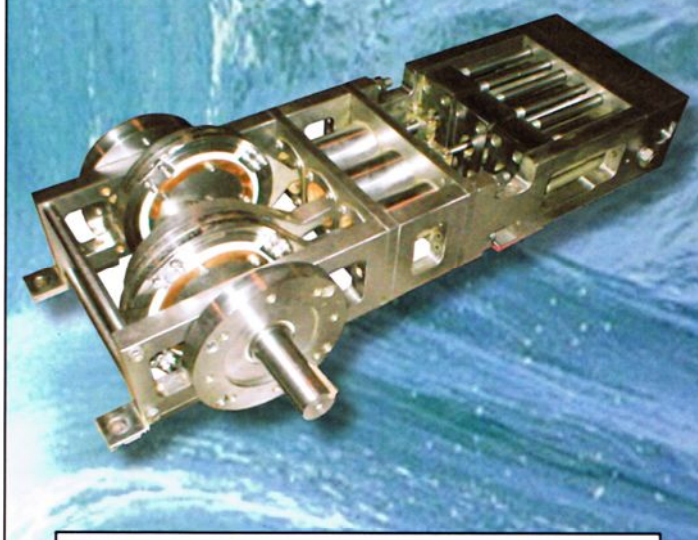

The UW-UH pumps are available in either a triplex or quintuplex configuration with a right or left-hand drive shaft. The UH version sports the time proven **JETECH® "AD" Liquid-end.**

The pumps are made with all stainless steel construction including the power end. This permits corrosion tolerance to seawater.

The main and connecting rod bearings are designed and manufactured by JETECH® and are non-metallic, IOS-3000 material.

All the tie bolts are stainless steel or nickel coated to help prevent rusting and corrosion.

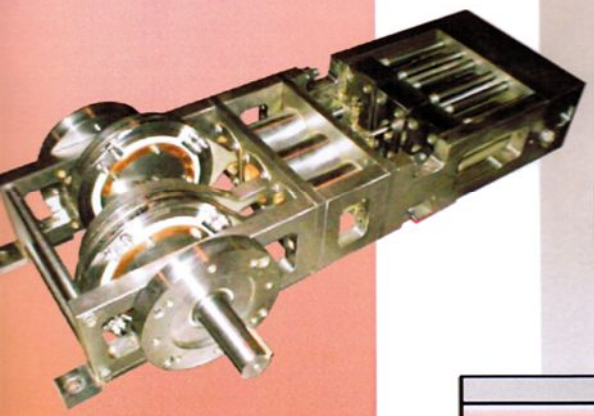

JETECH®

Pump Performance and Engineering Data

100J3-UW

		JETECH "AD" Liquid End Design								RO Design
		UH			H					RO
PRESSURE	PSI	40,000	30,000	20,000	20,000	14,000	10,000	8,000	5,500	1,200
PRESSURE	BAR	2,760	2,070	1,380	1,380	970	690	550	380	80
FLOW 600 RPM OUTPUT	GPM	3.5	4.6	7.2	7.2	10.3	14.1	18.4	25.9	115
FLOW 600 RPM OUTPUT	L/M	13.3	17.4	27.1	27.1	39.1	53.2	69.5	98.0	434
PLUNGER	INCH	7/16	1/2	5/8	5/8	3/4	7/8	1	1 3/16	2 1/2
PLUNGER	MM	11.1	12.7	15.9	15.9	19.1	22.2	25.4	30.2	63.5

Maximum Input Power	100 HP	75 KW
Stroke Length	3 INCH	76.2 mm
Weight (at surface)	430 Lbs	195 Kg
Power-End Type	Submersible Triplex	
Connecting Rod Bearings	IOS 3000	
Main Bearings	Double Ball	
Crank Shaft	Stainless Steel	
Power-End Lubrication	Water	

150J5-UW

		JETECH "AD" Liquid End Design								RO Design
		UH			H					RO
PRESSURE	PSI	40,000	30,000	20,000	20,000	14,000	10,000	8,000	5,500	1,200
PRESSURE	BAR	2,760	2,070	1,380	1,380	970	690	550	380	80
FLOW 550 RPM OUTPUT	GPM	5.4	7.0	11.0	11.0	15.8	21.5	28.0	39.6	175
FLOW 550 RPM OUTPUT	L/M	20.3	26.5	41.5	41.5	59.7	81.3	106	150	665
PLUNGER	INCH	7/16	1/2	5/8	5/8	3/4	7/8	1	1 3/16	2 1/2
PLUNGER	MM	11.1	12.7	15.9	15.9	19.1	22.2	25.4	30.2	63.5

Maximum Input Power	154 HP	115 KW
Stroke Length	3 INCH	76.2 mm
Weight (at surface)	610 Lbs	277 Kg
Power-End Type	Submersible Quint.	
Connecting Rod Bearings	IOS 3000	
Main Bearings	Double Ball	
Crank Shaft	Stainless Steel	
Power-End Lubrication	Water	

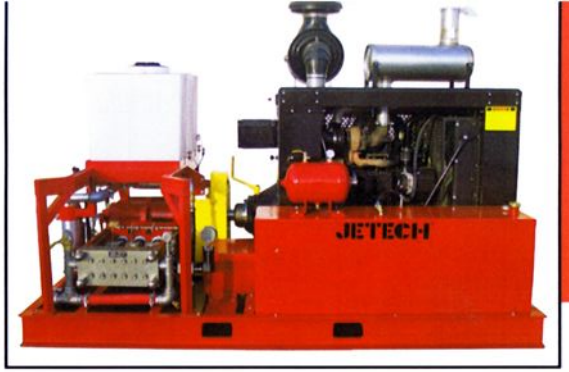

JETECH®

DIESEL DRIVEN UNITS

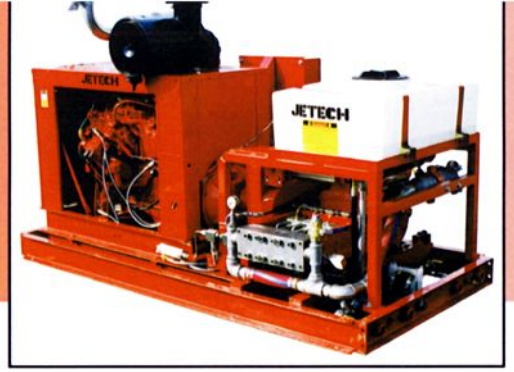

UH= Ultra-High Pressure (to 40K)
H= High Pressure (to 20K)
D= Diesel Unit
S= Skid- Type Base
T= Trailer- Type Base

● = Standard Equipment
● = Optional Equipment
□ =Option Not Available

	50TJ3				100TJ3				150TJ3				250TJ3				350TJ3				500TJ5				600TJ5			
	UHDT	UHDS	HDT	HDS	UHDT	UHDS	HDT	HDS	UHDT	UHDS	HDT	HDS	UHDT	UHDS	HDT	HDS	UHDT	UHDS	HDT	HDS	UHDT	UHDS	HDT	HDS	UHDT	UHDS	HDT	HDS
Driver	●	●	●	●																								
					●	●	●	●																				
									●	●	●	●																
													●	●	●	●												
																	●	●	●	●								
																					●	●	●	●				
																									●	●	●	●
	●	●	●	●	●	●	●	●	●	●	●	●	●	●	●	●	●	●	●	●	●	●	●	●	●	●	●	●
Drive Train	●	●	●	●	●	●	●	●	●	●	●	●	●	●	●	●	●	●	●	●	●	●	●	●	●	●	●	●
																					●	●	●	●	●	●	●	●
	●	●	●	●	●	●	●	●	●	●	●	●	●	●	●	●	●	●	●	●								
	●	●	●	●	●	●	●	●	●	●	●	●	●	●	●	●	●	●	●	●	●	●	●	●	●	●	●	●
Fuel Tanks	●	●	●	●																								
					●	●	●	●																				
									●	●	●	●																
													●	●	●	●												
																	●	●	●	●								
																					●	●	●	●				
																									●	●	●	●
Instrument Manifold			●	●			●	●			●	●			●	●			●	●			●	●			●	●
	●	●			●	●			●	●			●	●			●	●			●	●			●	●		
	●	●	●	●	●	●	●	●	●	●	●	●	●	●	●	●	●	●	●	●	●	●	●	●	●	●	●	●
	●	●	●	●	●	●	●	●	●	●	●	●	●	●	●	●	●	●	●	●	●	●	●	●	●	●	●	●
	●	●	●	●	●	●	●	●	●	●	●	●	●	●	●	●	●	●	●	●	●	●	●	●	●	●	●	●

Note 1- Tanks are non metallic, and include low water level protection

Relief Valve	Inlet: SS Single Suction Plumbing w/ Plunger Water Cooling System	Inlet: SS Double Suction Plumbing w/ Plunger Water Cooling System	Inlet: 25 Gal. Suction Supply Tank w / Centrifugal Feed Pump (note 1)	Inlet: 50 Gal. Suction Supply Tank w / Centrifugal Feed Pump (note 1)	Inlet: 100 Gal. Suction Supply Tank w / Centrifugal Feed Pump (note 1)	Inlet: 300 Gal. Suction Supply Tank w / Centrifugal Feed Pump (note 1)	Filtration: Cartridge Filter	Filtration: Bag Filter	Filtration: Dual Cartridge Filters in Parallel	Filtration: Dual Bag Filters in Parallel	Filtration: Dual Cartridge Filters in Series	Filtration: Dual Bag Filters in Series	Base: Heavy Duty Fabricated Steel Skid with Fork Lift Pockets	Base: 4-Point Lift Frame	Base: Full Enclosure - Open to Operate	Base: Full Enclosure - Operate while Closed (Noise Dampening)	Color: Paint: Jetech Red	Color: Paint: Special	Trailer: Single Axle Trailer	Trailer: Dual Axle Trailer	Trailer: Triple Axle Trailer	Trailer: Electric Brakes	Trailer: Hydraulic Surge Brakes	Trailer: Pintle Hitch	Trailer: 2-5/16 Ball Hitch	Misc: Engine Mounted Air Compressor with Air Tank	Misc: Engine Mounted Hydraulic Pump	Misc: Automatic Throttle Control (includes Electronic Pressure Gauge)	Misc: Heavy Duty Battery	Weight: Pounds	Weight: Kilograms
●		●								●		●	●	●	●	●	●	●								●	●	●	●	16,900	7670
●		●								●		●		●	●	●	●	●			●	●	●	●	●	●	●	●	●	19,400	8800
		●				●		●	●	●		●	●	●	●	●	●	●								●	●	●	●	16,900	7670
		●				●		●	●	●		●		●	●	●	●	●			●	●	●	●	●	●	●	●	●	19,400	8800
●		●						●		●		●	●	●	●	●	●	●								●	●	●	●	15,900	7210
●		●						●		●		●		●	●	●	●	●			●	●	●	●	●	●	●	●	●	18,400	8350
		●				●		●	●	●	●	●	●	●	●	●	●	●								●	●	●	●	15,900	7210
		●				●		●	●	●	●	●		●	●	●	●	●			●	●	●	●	●	●	●	●	●	18,400	8350
●		●			●			●	●	●	●	●	●	●	●	●	●	●								●	●	●	●	7,500	3400
●		●			●			●	●	●	●	●		●	●	●	●	●		●		●	●	●	●	●	●	●	●	9,300	4220
		●			●			●	●	●	●	●	●	●	●	●	●	●								●	●	●	●	7,500	3400
		●			●			●	●	●	●	●		●	●	●	●	●		●		●	●	●	●	●	●	●	●	9,300	4220
●		●			●			●	●	●	●	●	●	●	●	●	●	●								●	●	●	●	6,000	2720
●		●			●			●	●	●	●	●		●	●	●	●	●		●		●	●	●	●	●	●	●	●	7,700	3490
		●			●			●	●	●	●	●	●	●	●	●	●	●								●	●	●	●	6,000	2720
		●			●			●	●	●	●	●		●	●	●	●	●		●		●	●	●	●	●	●	●	●	7,700	3490
●		●		●	●			●	●	●	●	●	●	●	●	●	●	●								●	●	●	●	5,450	2470
●		●		●	●			●	●	●	●	●		●	●	●	●	●		●		●	●	●	●	●	●	●	●	7,000	3180
		●		●	●			●	●	●	●	●	●	●	●	●	●	●								●	●	●	●	5,450	2470
		●		●	●			●	●	●	●	●		●	●	●	●	●		●		●	●	●	●	●	●	●	●	7,000	3180
●		●		●	●		●	●	●	●	●	●	●	●	●	●	●	●								●	●	●	●	3,600	1630
●		●		●	●		●	●	●	●	●	●		●	●	●	●	●	●	●		●		●	●	●	●	●	●	4,200	1910
	●	●		●	●		●	●	●	●	●	●	●	●	●	●	●	●								●	●	●	●	3,600	1630
	●	●		●	●		●	●	●	●	●	●		●	●	●	●	●	●	●		●		●	●	●	●	●	●	4,200	1910
●	●	●	●				●	●	●		●		●	●	●	●	●	●								●	●	●	●	1,800	820
●	●	●	●				●	●	●		●			●	●	●	●	●	●					●	●	●	●	●	●	2,200	1000
	●	●	●				●	●	●		●		●	●	●	●	●	●								●	●	●	●	1,800	820
	●	●	●				●	●	●		●			●	●	●	●	●	●					●	●	●	●	●	●	2,200	1000

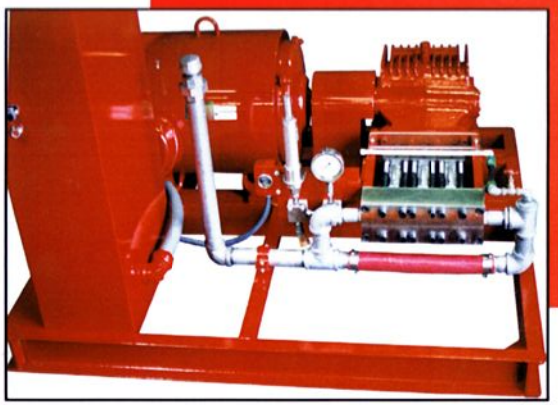

JETECH®

ELECTRIC DRIVEN UNITS

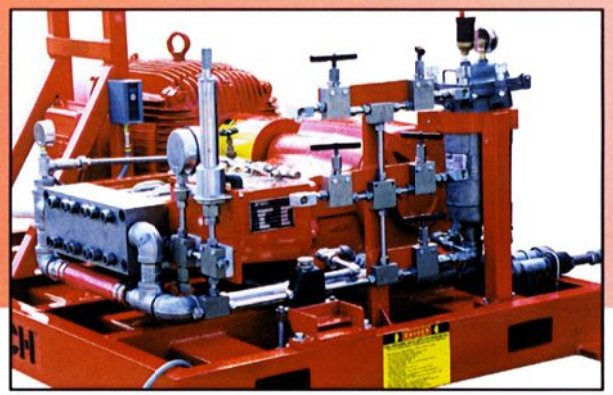

UH= Ultra-High Pressure (to 40K)

H= High Pressure (to 20K)

E= Electric Unit

S= Skid- Type Base

● = Standard Equipment

● = Optional Equipment

□ =Option Not Available

50TJ3		100TJ3		150TJ3		250TJ3		350TJ3		500TJ5		600TJ5			
UHES	HES	UHES	HES	UHES	HES	UHES	HES	UHES	HES	UHES	HES	UHES	HES		
●	●													50 HP TEFC 3-PH 230/460 Volt 60Hz.	Power
		●	●											100 HP TEFC 3-PH 230/460 Volt 60Hz.	Power
				●	●									150HP TEFC 3-PH 230/460 Volt 60Hz.	Power
						●	●							250 HP TEFC 3-PH 230/460 Volt 60Hz.	Power
								●	●					350 HP TEFC 3-PH 230/460 Volt 60Hz.	Power
										●	●			500 HP TEFC 3-PH 230/460 Volt 60Hz.	Power
												●	●	600 HP WPI 3-PH 460 Volt 60Hz.	Power
●	●	●	●	●	●	●	●	●	●	●	●	●	●	Other Voltage	Power
●	●	●	●	●	●	●	●	●	●	●	●	●	●	50 htz Motor	Power
●	●	●	●	●	●	●	●	●	●	●	●	●	●	Explosion Proof	Power
●	●	●	●	●	●	●	●	●	●	●	●	●	●	Low Suction Pressure Protection	Power
										●	●	●	●	Positive Drive Cog Belt & Sheaves	Drive Train
●	●	●	●	●	●	●	●	●	●					Direct Connect Fexible Coupling	Drive Train
●	●	●	●	●	●	●	●	●	●	●	●	●	●	Belt / Coupling Guard	Drive Train
●	●	●	●	●	●	●	●	●	●	●	●	●	●	Control Panel - Standard - NEMA 4 (note 1)	Contro
●	●	●	●	●	●	●	●	●	●	●	●	●	●	Control Panel - Explosion Proof - NEMA 7/9 (note 2)	Contro
●	●	●	●	●	●	●	●	●	●	●	●	●	●	Remote Panel (note 3)	Contro

s	Special Controls	●	●	●	●	●	●	●	●	●	●	●	●	●	●	●	●
	Soft-Start Motor Control	●	●	●	●	●	●	●	●	●	●	●	●	●	●	●	●
Instrument Manifold	0-35K Liquid filled Pressure Gauge		●		●		●		●		●		●		●		●
	0-80K Liquid filled Pressure Gauge	●		●		●		●		●		●		●		●	
	Electronic Pressure Gauge (Digital Display)	●	●	●	●	●	●	●	●	●	●	●	●	●	●	●	●
	Single Rupture Disc Assembly	●	●	●	●	●	●	●	●	●	●						
	Double Rupture Disc Assembly	●	●	●	●	●	●	●	●	●	●	●	●	●	●	●	●
	Relief Valve		●		●		●		●		●		●		●		●
Inlet	SS Single Suction Plumbing w/ Plunger Water Cooling System	●	●	●	●												
	SS Double Suction Plumbing w/ Plunger Water Cooling System	●	●	●	●	●	●	●	●	●	●	●	●	●	●	●	●
	25 Gal. Suction Supply Tank w / Centrifugal Feed Pump (note 4)	●	●														
	50 Gal. Suction Supply Tank w / Centrifugal Feed Pump (note 4)			●	●	●	●										
	100 Gal. Suction Supply Tank w / Centrifugal Feed Pump (note 4)			●	●	●	●	●	●	●	●						
	300 Gal. Suction Supply Tank w / Centrifugal Feed Pump (note 4)											●		●			
Filtration	Cartridge Filter	●	●	●	●												
	Bag Filter	●	●	●	●	●	●	●	●	●	●	●	●	●	●	●	●
	Dual Cartridge Filters in Parallel	●	●	●	●	●	●	●	●	●	●	●	●	●	●	●	●
	Dual Bag Filters in Parallel	●	●	●	●	●	●	●	●	●	●	●	●	●	●	●	●
	Dual Cartridge Filters in Series	●	●	●	●	●	●	●	●	●	●	●	●	●	●	●	●
	Dual Bag Filters in Series	●	●	●	●	●	●	●	●	●	●	●	●	●	●	●	●
Base	Heavy Duty Fabricated Steel Skid with Fork Lift Pockets	●	●	●	●	●	●	●	●	●	●	●	●	●	●	●	●
	Full Enclosure (Noise Dampening)	●	●	●	●	●	●	●	●	●	●	●	●	●	●	●	●
	Casters on Skid	●	●	●	●	●	●	●	●	●	●						
	Tow Bar	●	●	●	●	●	●	●	●	●	●						
Color	Paint: Jetech Red	●	●	●	●	●	●	●	●	●	●	●	●	●	●	●	●
	Paint: Special	●	●	●	●	●	●	●	●	●	●	●	●	●	●	●	●
Weight	Pounds	1,900	1,900	3,800	3,800	5,800	5,800	6,400	6,400	7,900	7,900	16,400	16,400	17,400	17,400		
	Kilograms	860	860	1720	1720	2630	2630	2900	2900	3580	3580	7440	7440	7890	7890		

Note 1- Standard control panel includes: Fused Disconnect, Standard Motor Starter, Start Button, Stop Button and Hour Meter
Note 2- Consult factory for specific requirements
Note 3- Remote panel excludes wiring between unit and panel
Note 4- Tanks are non metalic, and include low water level protection

JETTECH®

日本総代理店 **株式会社エーエムシー**

〒960-1303
福島県福島市飯野町青木字鴨屋敷4－4
電話:024-562-4006
FAX :024-562-4074
http://amc-waterjet.com/
Mail:info@amc-waterjet.com